ASSEMBLY INSTRUCTIONS

DESCRIP: 40 x 54 - 72" COUNTER TABLE

ITEM: KI-TA-4072G-BMW-C

Thank you for purchasing this quality product. Be sure to check all packing material carefully for small parts which may have come loose inside the carton during shipment. Identify and count all parts and compare with the parts list below.
Please keep all hardware out of reach of small children.

1 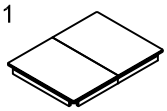 TABLE TOP (x1)	2 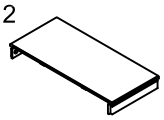 TABLE LEAF TOP (x1)	3 TABLE LEG (x4)	4 LEAF SUPPORT RAIL (x2)				
A 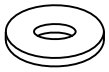 FLAT WASHER Ø5/16" x Ø19mm (x12)	B SPRING WASHER Ø5/16" x Ø12mm (x12)	C BOLT Ø1/4" x 75 (x4)	D HEX NUT Ø5/16" x 12mm (x8)	E ALLEN KEY 58 x 23 x 4mm (x1)	F 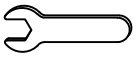 WRENCH 12 x 75mm (X1)		

COMPLETE ASSEMBLE

ASSEMBLY TIPS:

1.Remove hardware from box and sort by size.
2.Please check to see that all hardware and parts are present prior start of assembly.
3.Please follow attached instructions in the same sequence as numbered to assure fast and easy assembly.

⚠ WARNING

1.Don't attempt to repair or modify parts that are broken or defective. Please contact the store immediately.
2.This product is for home use only and not intended for commercial establishments.

MADE IN VIETNAM

ASSEMBLY INSTRUCTIONS

DESCRIP: 40 x 54 - 72" COUNTER TABLE

ITEM: KI-TA-4072G-BMW-C

Thank you for purchasing this quality product. Be sure to check all packing material carefully for small parts which may have come loose inside the carton during shipment. Identify and count all parts and compare with the parts list below.
Please keep all hardware out of reach of small children.

STEP 1

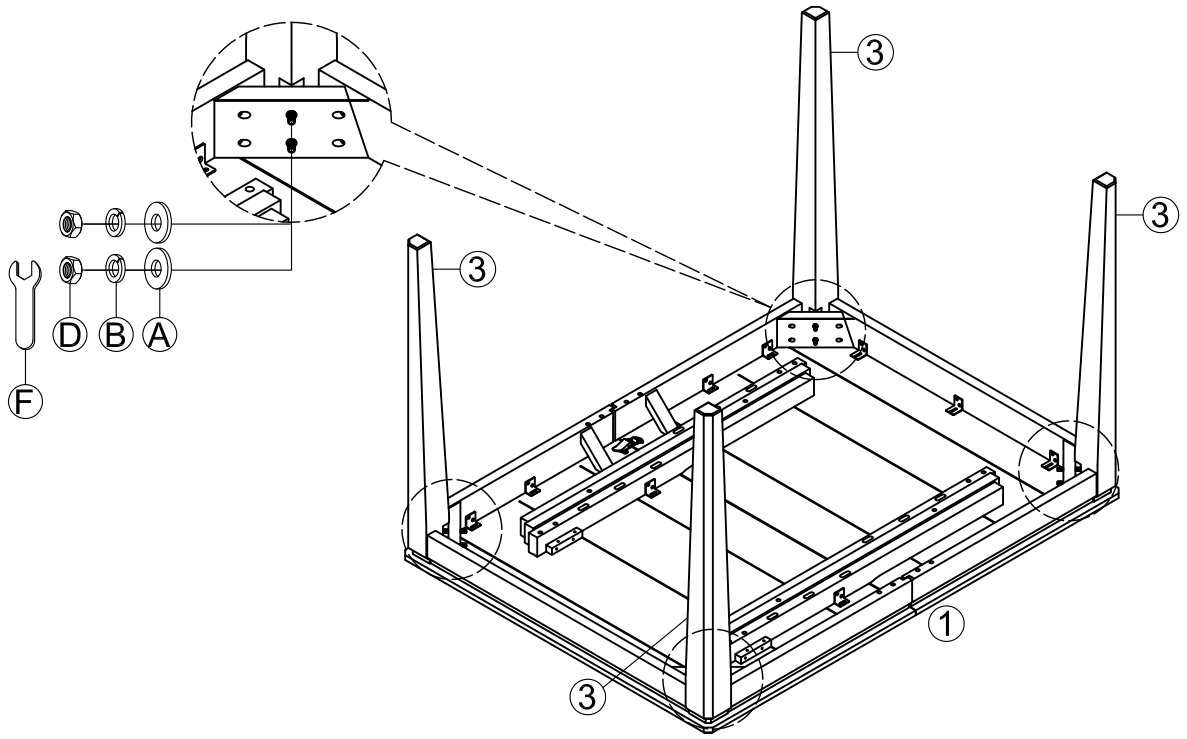

STEP 2

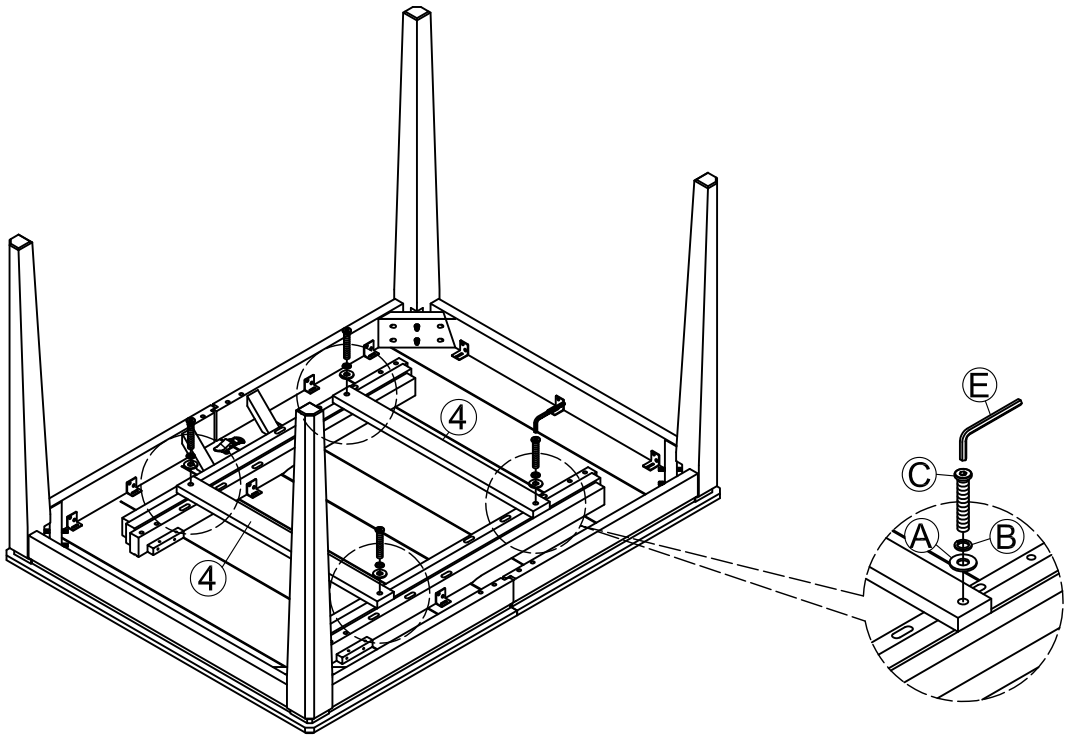

MADE IN VIETNAM

ASSEMBLY INSTRUCTIONS

DESCRIP: 40 x 54 - 72" COUNTER TABLE
ITEM: KI-TA-4072G-BMW-C

Thank you for purchasing this quality product. Be sure to check all packing material carefully for small parts which may have come loose inside the carton during shipment. Identify and count all parts and compare with the parts list below.
Please keep all hardware out of reach of small children.

STEP 5

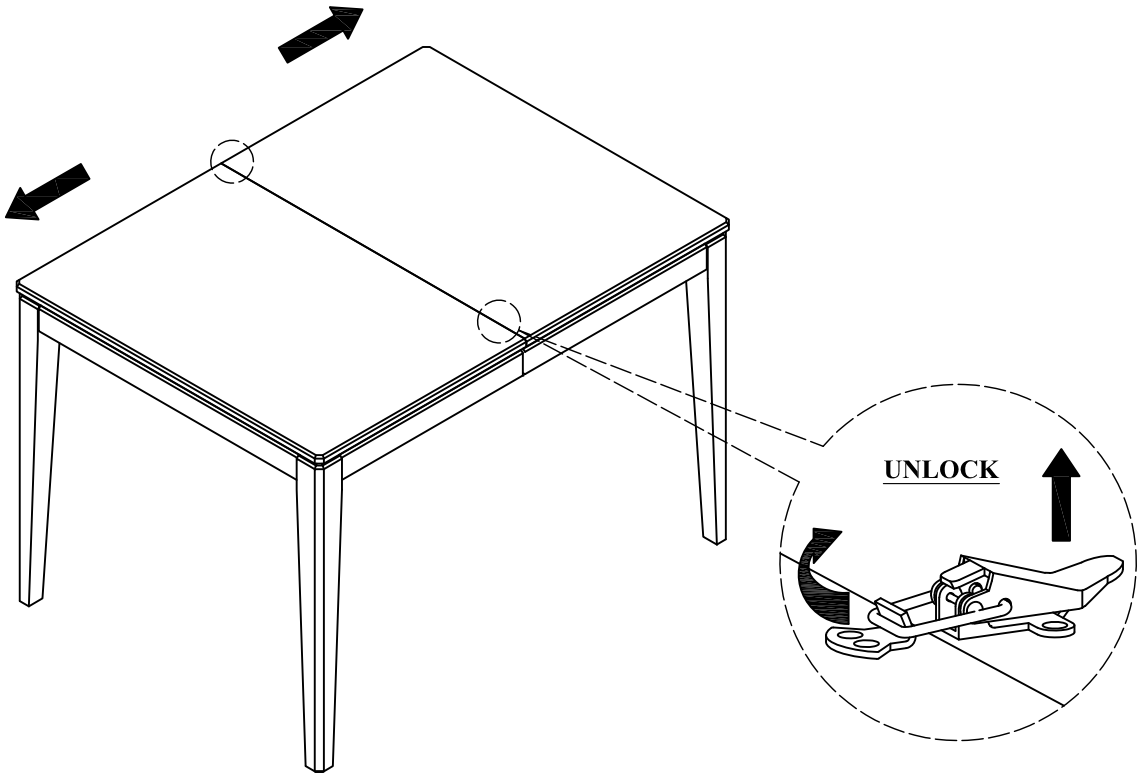

STEP 6

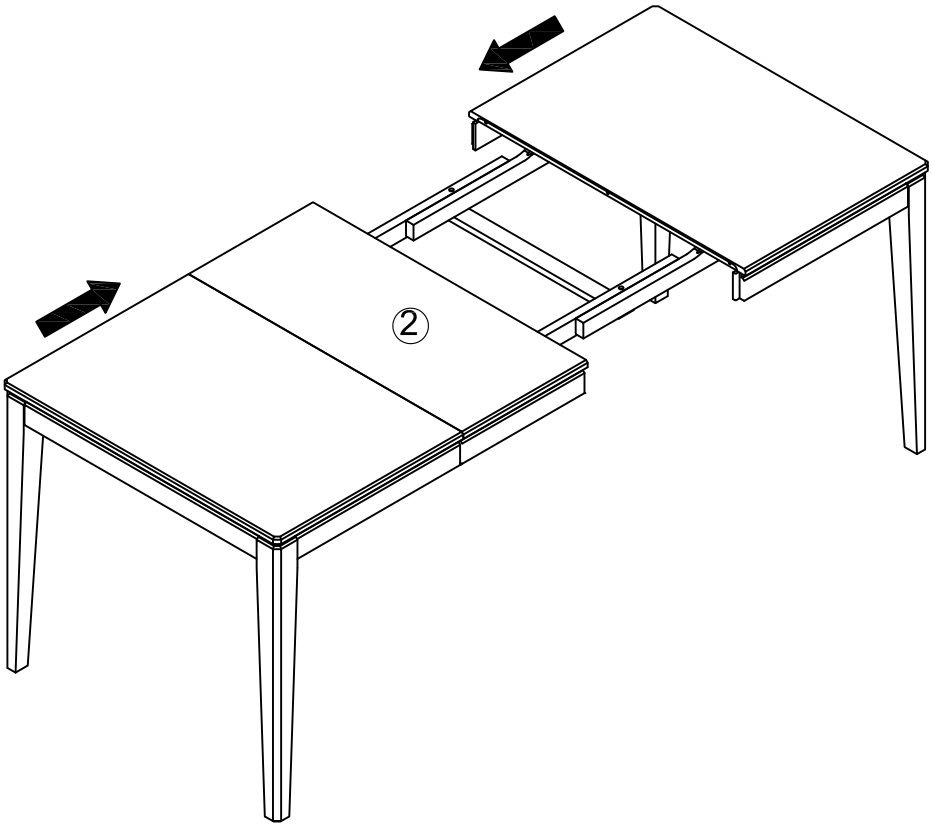

MADE IN VIETNAM

ASSEMBLY INSTRUCTIONS

DESCRIP: 40 x 54 - 72" COUNTER TABLE
ITEM: KI-TA-4072G-BMW-C

Thank you for purchasing this quality product. Be sure to check all packing material carefully for small parts which may have come loose inside the carton during shipment. Identify and count all parts and compare with the parts list below.
Please keep all hardware out of reach of small children.

STEP 7

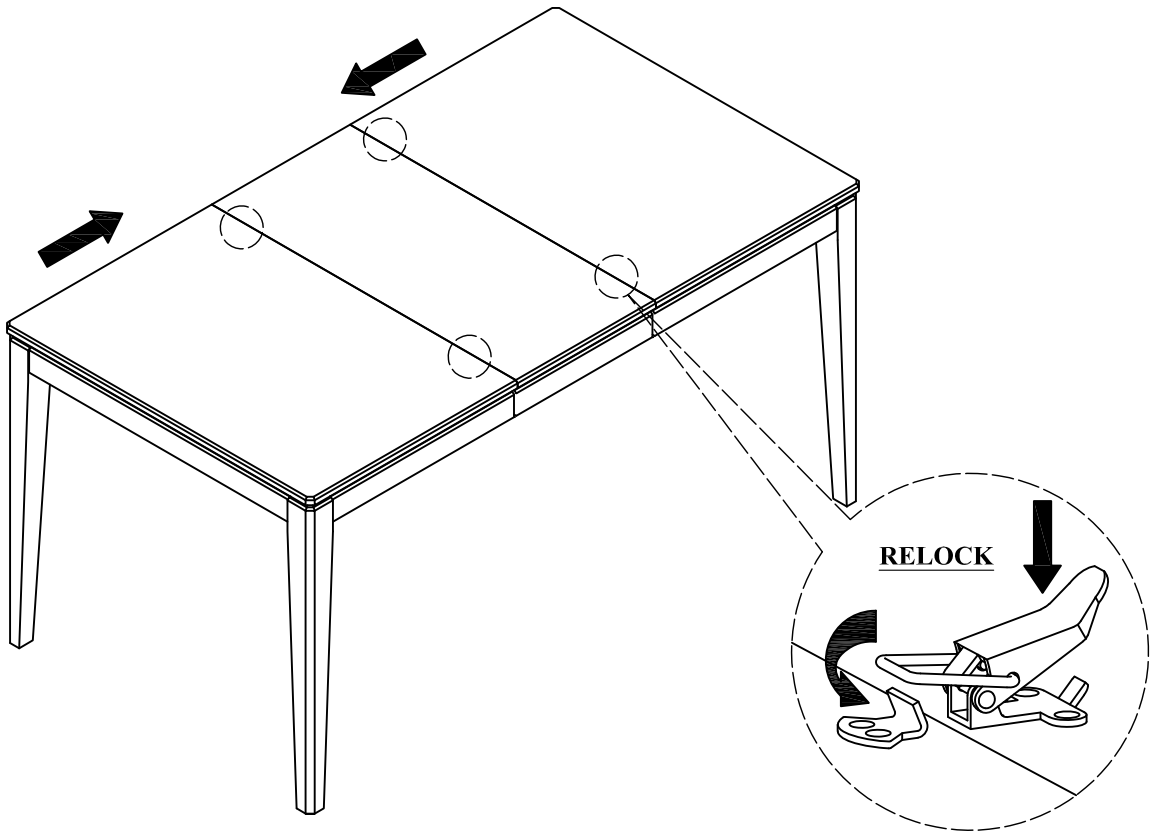

STEP 8

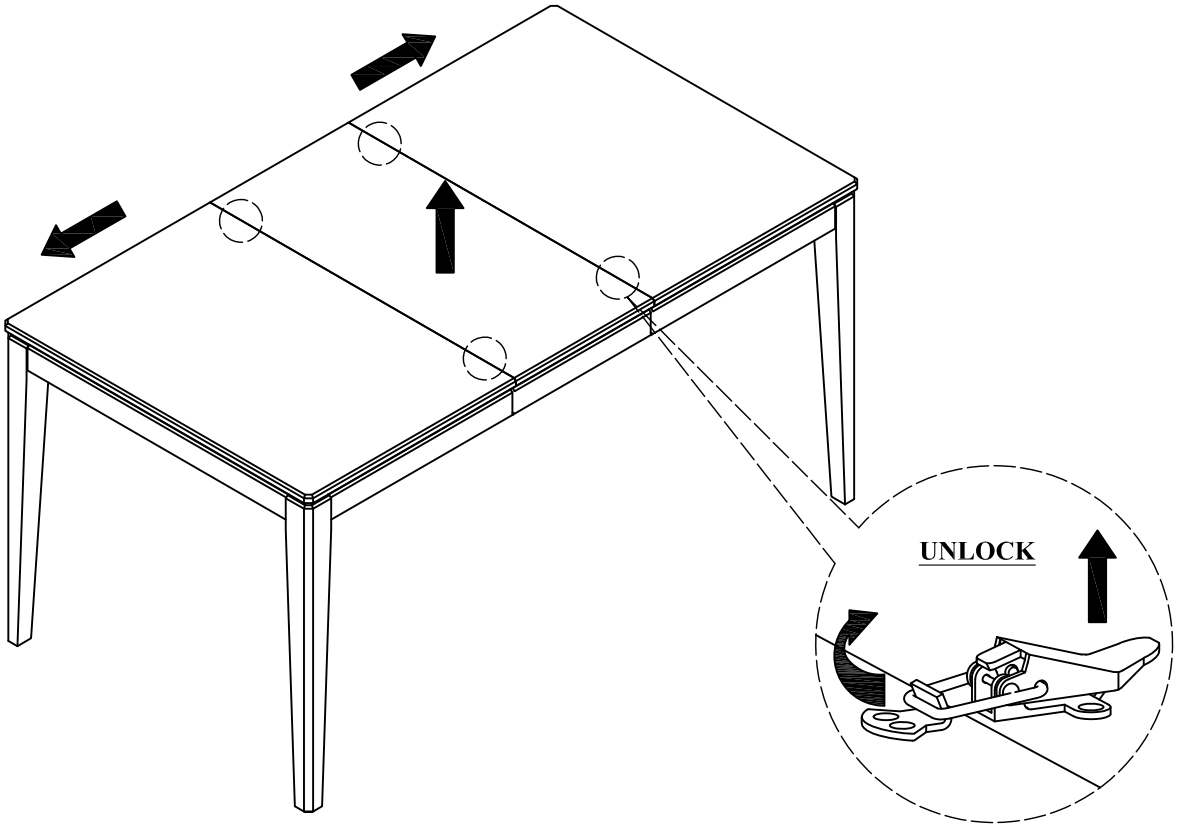

MADE IN VIETNAM

ASSEMBLY INSTRUCTIONS

DESCRIP: 40 x 54 - 72" COUNTER TABLE
ITEM: KI-TA-4072G-BMW-C

Thank you for purchasing this quality product. Be sure to check all packing material carefully for small parts which may have come loose inside the carton during shipment. Identify and count all parts and compare with the parts list below.
Please keep all hardware out of reach of small children.

STEP 9

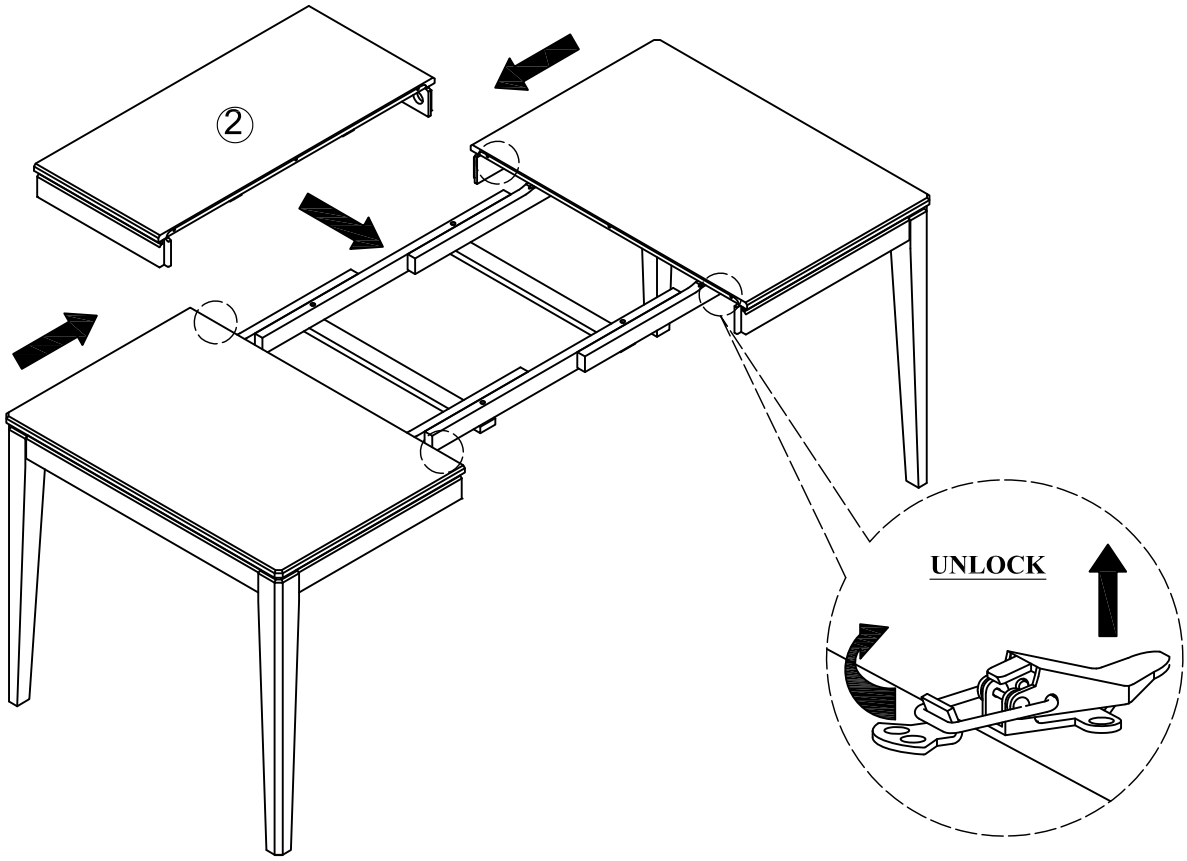

STEP 10

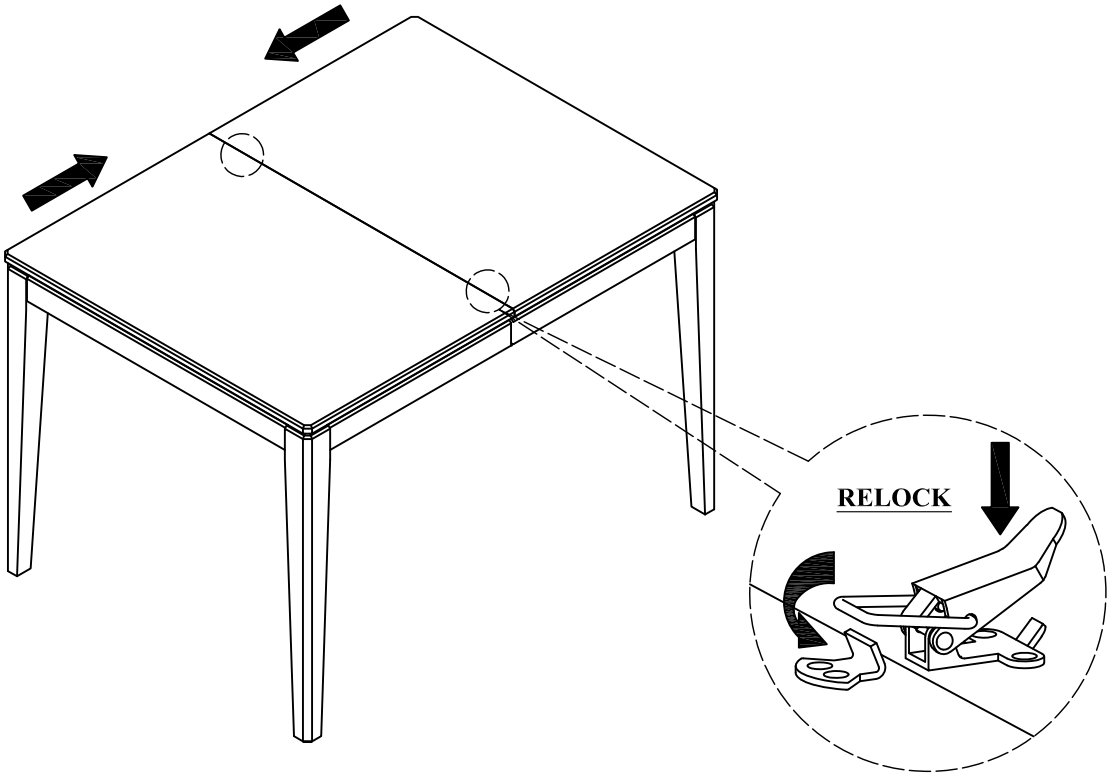

MADE IN VIETNAM